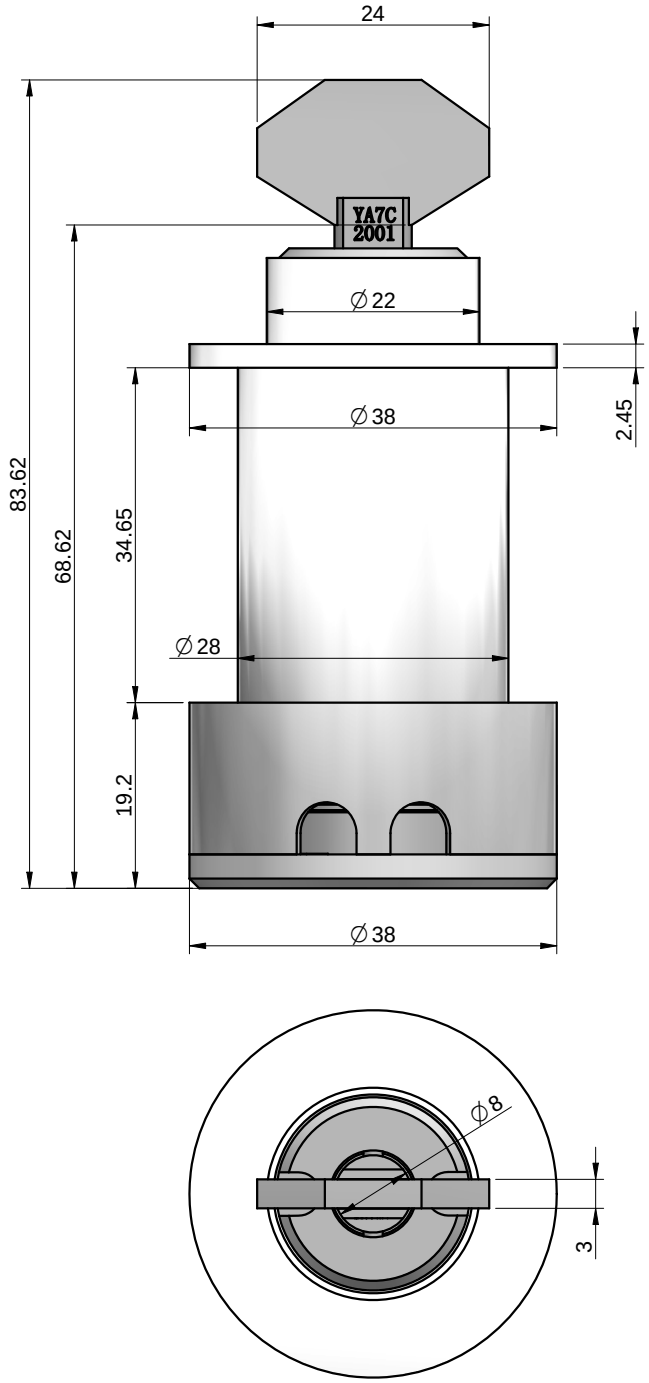
24
YA7C
2001
∅22
∅38
2.45
83.62
68.62
34.65
∅28
19.2
∅38
∅8
3