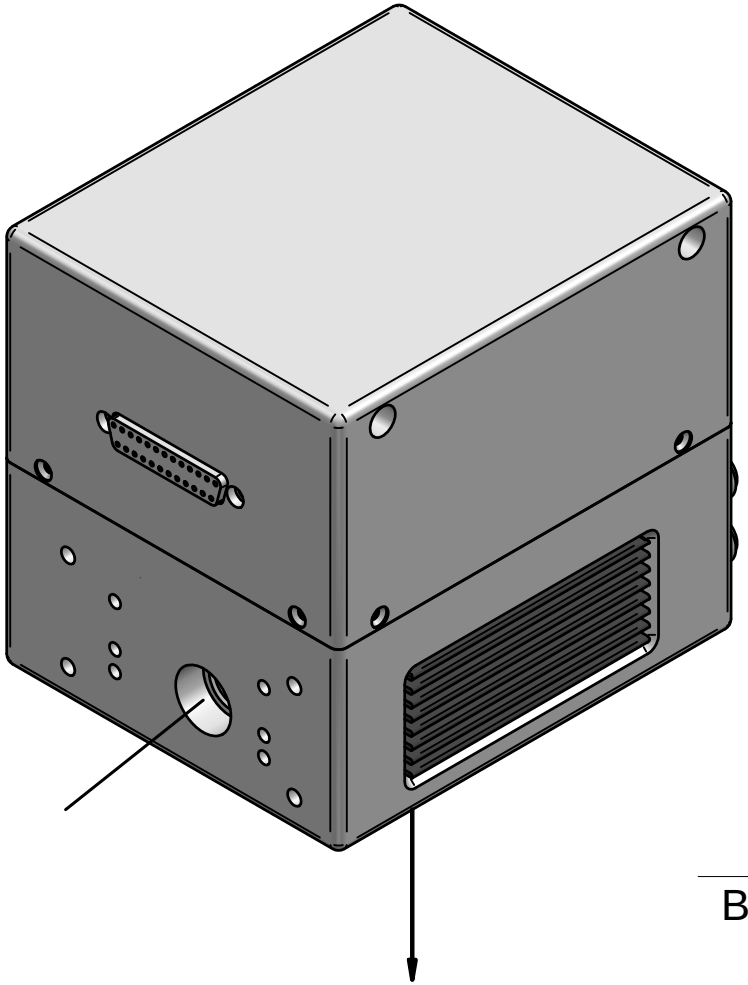

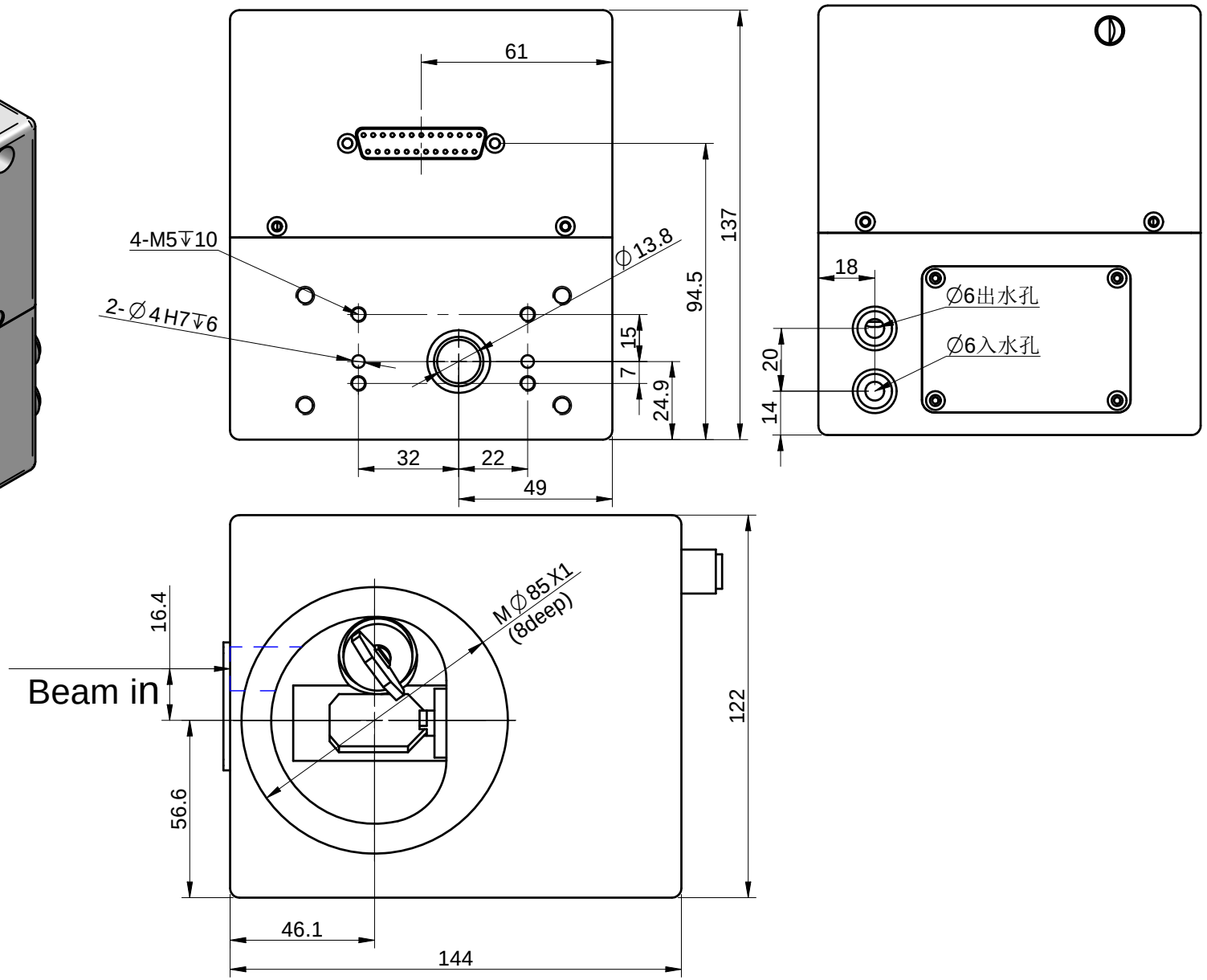
61
137
4-M5↧10
∅13.8
2-∅4H7↧6
94.5
15
7
24.9
32
22
49
18
∅6出水孔
∅6入水孔
20
14
16.4
Beam in
M∅85X1
(8deep)
122
56.6
46.1
144